Engineering Volvo Penta	Lastbe	Change-description	P/N: Modified	RELEASED
Engineering Volvo Penta			0: 1 . 2 Modified NO	
D-14493-57		SEE ECN		Date 12-12-16

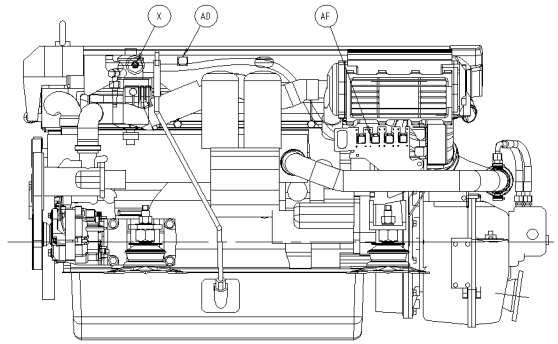

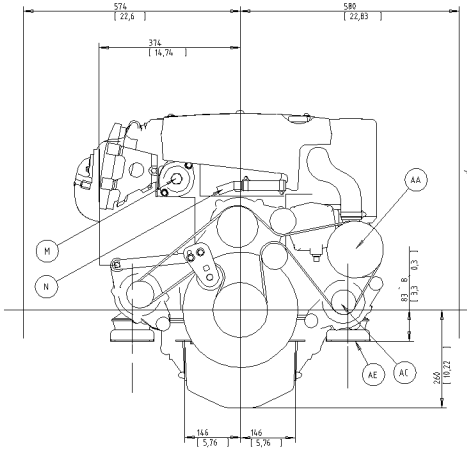

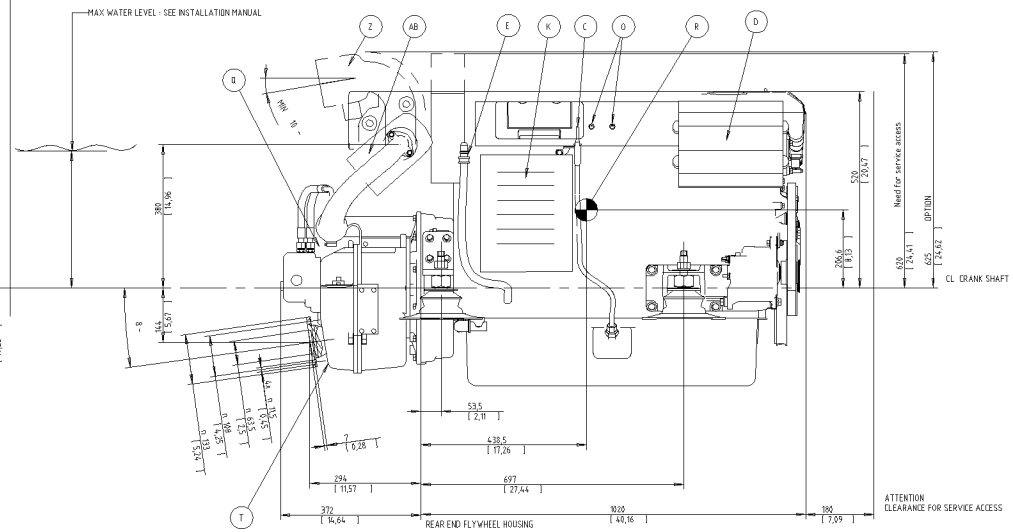

- (A) WATER FILLER CAP, FRESH WATER
- (B) OIL FILLER CAP, ENGINE
- (C) OIL DIP STICK, ENGINE LEFT OR RIGHT SIDE MOUNTED
- (D) ECU CONTROL UNIT
- (E) OIL DRAIN PIPE, ENGINE n 12.5
- (F) OIL FILTER MAIN
- (G) OIL FILTER BYPASS
- (H) LIFTING EYE
- (I) WATER DRAIN, FRESH WATER
- (J) WATER DRAIN, SEA WATER
- (K) AIR FILTER
- (L) FUEL FILTER
- (M) HOT WATER OUTLET n 16
- (N) HOT WATER INLET n 16
- (O) ELECTRICAL FUSES (ONLY 24V)
- (P) SEA WATER INLET n 50
- (Q) OIL DIP STICK REVERSE GEAR
- (R) CENTRE OF GRAVITY
- (S) WATER INLET
- (T) OIL DRAIN REVERSE GEAR
- (U) FUEL INLET CONNECTION
- (V) FUEL RETURN TO TANK
- (X) ENGINE STOP
- (Y) CRANK CASE VENTILATION
- (Z) EXHAUST RISER n 127 (5") (OPTION)
- (AA) SEA WATER PUMP
- (AB) EXHAUST ELBOW n 127 (5")
- (AC) EXTRA ALTERNATOR
- (AD) DIAGNOSE CONNECTOR
- (AE) ELASTIC SUSPENSION (4x)
- (AF) DATALINK, SENDER AND AUX (2x)

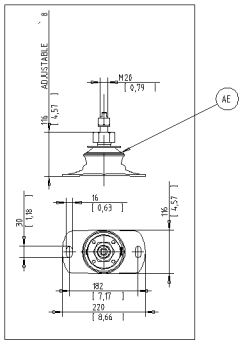

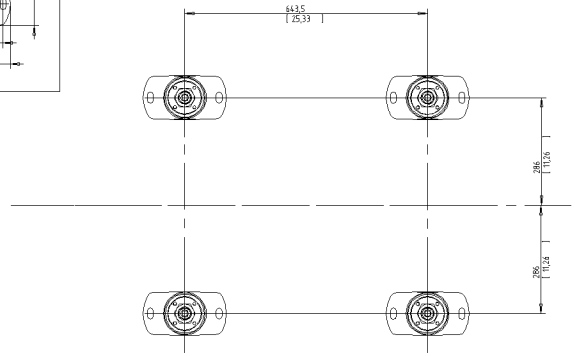

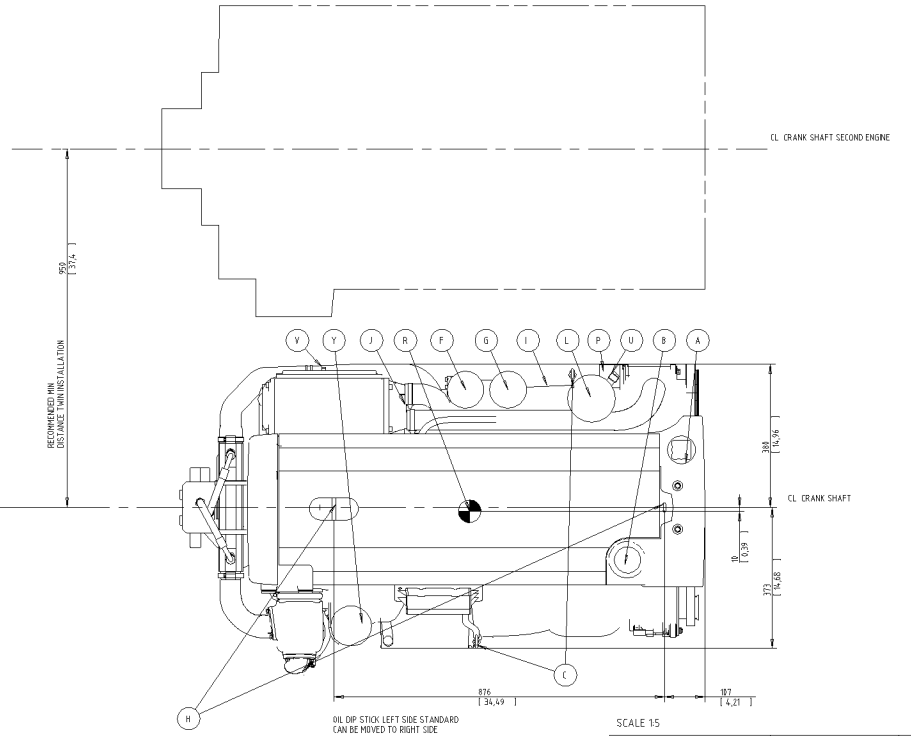

SCALE 1:5

The copying, distribution and utilization of this document as well as the communication of its contents to others without expressed authorization is prohibited. Offenders will be held liable for the payment of damages. All rights in the event of the grant of a patent, utility model or ornamental design registration.

VOLVO PENTA

SYMBOLS, DESIGNATIONS AND GENERAL DRAWING METHODS STD 181-0005

Drawing title: ENGINE DIMENSIONS D6 HS63AE

Drawing type: DIMENSION DRAWING

Drawing no: 21912419 | Issue index: 01 | Sheet no: 1/1 | Sheet size: A0